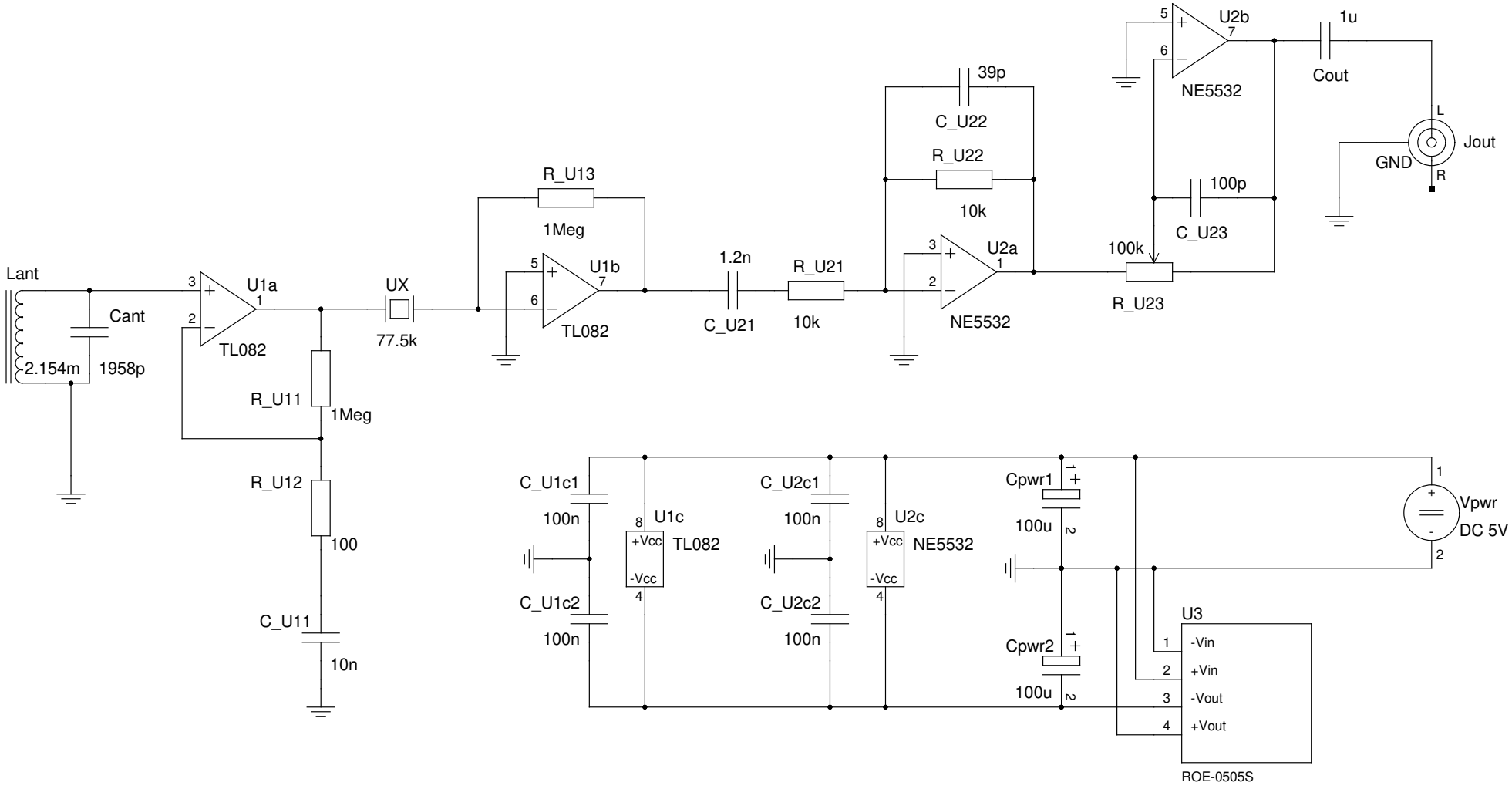

TITLE: DCF77-Empfänger	
FILE:	REVISION: 2015-04-06
PAGE 1 OF 1	DRAWN BY: Ingo D. Rullhusen